HOUSING AUTHORITY
CITY OF BROWNSVILLE

ADDENDUM TO IFB DOCUMENTS

INVITATION FOR BID: HACB IFB NO. 19-007 RE-ROOFING THE BOUGAINVILLEA DEVELOPMENT.

ADDENDUM No.: 1

DATE: 05/10/2019

To All Potential Bidders:

This addendum is issued to modify the previously issued bid documents and/or given for informational purposes and is hereby made a part of the bid documents. Please attach this addendum to the documents in your possession. ***Per the IFB, the proposer shall acknowledge receipt of any and all addenda, if any, listing the Addenda by number(s) and date(s) in their Bid Fee Sheet form.***

REVISED IFB DOCUMENTS:

I. Scope of Work
II. Roof Plans
III. Roof Tabulation

REVISED DOCUMENT: Please utilize the attached revised Scope of Work document. The one in the package is now obsolete.

QUESTIONS & ANSWERS:

Q1. Do we know the measurements of the roof?
A2: Yes, the IFB document provided measurements, however, it's the contractor's responsibility to visit the site to address measurements.

Q2. Is it shingles?
A2: Yes, all roofs are asphalt shingles.

Q3: How many years warranty?
A3: 50 Years warranty.

Q4: On the seventy-two-hour notice to residents, how many buildings can you work on at the same time?
A4: Once the bid is awarded; a pre-construction meeting will be conducted, HACB will coordinate with contractor to facilitate the project.

Q5: Do we have a designated staging area?
A5: We always ask contractors if materials will be present at the site to have materials secured for residents' safety and theft prevention. It is recommended to designate an area for storage that is fenced in or supplies can be delivered at site as needed.

Q6: Do we mandate fenced-in area?
A6: We would prefer for it to be secured and ask for all materials being disposed to be hauled out.

Q7: Can we access the side of the building with a trailer or dump truck?
A7: Yes, at the contractor's expense and risk.

Q8: Do contractors need to include an allowance for grass area or damages?
A8: Contractor must prepare estimate at their own discretion, however the bidder awarded will be responsible for any damages made to the property while performing the work.

Q9: What are the working hours allowed?
A9: Monday - Thursday: 8:00 a.m. - 5:30 p.m. and Friday: 8:00 a.m. - 12:00 p.m.
No weekends or holidays.

Q10: The time allocated in the bid proposal should be working days?
A10: Calendar days. (See HACB IFB 19-007 pg. 6)

Q11: What square footage allowance should be included for deck repairs?
A11: The IFB document states under the Bid Fee Sheet; ''In performing the work there may be a need to replace a sheet of damaged plywood and/or replace a section of fascia/soffit. Therefore, please indicate the cost of:

Replacing a sheet of plywood: $ _____.
Replacing a linear foot of fascia/soffit: $ _____.''

Q12: Do contractor need to be part of Section 3 hiring process?
A12: We encourage the contractors to hire Section 3 employees, ads should be placed at the site with the property manager to advise residents of employment opportunity. Contractors will be evaluated, HACB uses the Davis-Bacon wage rates for Cameron and Hidalgo Counties.

Q13: What is the bid evaluation based on, is it based on a point system?
A13: Under sealed bids, the HACB publicly solicits bids and awards a firm fixed-price contract (lump sum or unit price) to the responsible bidder whose bid, conforming with all the materials terms and conditions of the Invitation for Bid (IFB), is the lowest in price.

Q14: Who do we contact to schedule a site visit?
A14: For site visits please contact Procurement Manager Ms. Korina Amador at kamador@hacb.us or (956) 214- 1536. A site visit has been scheduled for Monday, May 13, 2019, at 10:00 a.m. at the Bougainvillea Development 755 W. Jefferson St. Brownsville, TX 78521. Anyone interested is welcomed to attend.

END OF ADDEND

BOUGAINVILLEAS

RE-ROOFING

Technical Specifications

HACB
HOUSING AUTHORITY
CITY OF BROWNSVILLE

BOUGAINVILLEA DEVELOPMENT

755 W. Jefferson St., Brownsville, TX 78520

RE-ROOFING / TECHNICAL SPECIFICATIONS

PART 1 - GENERAL

1.1 DEVELOPMENTS.

The Bougainvillea Development was constructed in 1941. The buildings consist of duplex and fourplex with brick veneer finish. The ground floors constructed with reinforced concrete and have roofs with asphalt shingles.

1.2 DESCRIPTION OF THE WORK.

A. Work Included. The Contractor shall furnish all labor, materials, tools, and equipment necessary for the successful execution of the replacement of asphalt shingles, underlayment, nails and fasteners, fascia, soffit and paint.
B. The work will consist of replacing the roofs of all 23 buildings (50 units) in this development.

C. Summary:

1. Asphalt Shingles.
2. Underlayment.
3. Roof vents.
4. Metal flashing and trim.

D. Related work described elsewhere:

1. Demolition: Existing roof removal and disposal.
2. Rough Carpentry: Wood nailers, curbs and blocking.
3. Sheating: Wood roof decking repairs.
4. Fascia: Hardy Plank 2", 4", 8".
5. Soffit: Hardy plank soofit vented.
6. Finish Carpentry: Gutters and downspouts.
7. Roof Accessories: Roof vents.
8. Exterior Primer.
9. Exterior Paint Semigloss (color will be provided by HACB).

1.3 DEFINITION.

A. Roofing Terminology

See ASTM D 1079 and glossary of NRCA's "The NRCA Roofing and Waterproofing Manual" for definitions of terms related to roofing work in this Section.

1.4 PRECONSTRUCTION MEETINGS

A. Preconstruction Conference: HACB Facilities team will be conducting pre-construction meeting at administration offices.

B. Prior to the start of the roofing project, the Owner's representative, Contractor, Roofing Contractor representative and any other Subcontractors whose work complements, penetrates, or is mounted on the roof, are recommending being in attendance.

1.5 ACTION SUBMITTALS.

A. Product Data: For each type of product.

B. Samples for verification. Within 10 days after award of contract, and before any roofing materials are ordered, submit two samples of style selected fiberglass shingles, indicating full range of colors available for HACB selection and approval.

1. Asphalt Shingles: Full size.
2. Ridge and Hip Cap Shingles: Full size.
3. Ridge Vent: 12-inch-long Sample.
4. Concealed Valley Lining: 12 inches square.

1.6 INFORMATION SUBMITTALS.

A. Qualification Data: For Installer.

B. Product Test Reports: For each type of asphalt shingle and underlayment product indicated, for tests performed by manufacturer and witnessed by a qualified testing agency.

C. Evaluation Reports: For synthetic underlayment and high-temperature, self-adhering sheet underlayment, from ICC-ES or other testing and inspecting agency acceptable to authorities having jurisdiction, indicating that product is suitable for intended use under applicable building codes.

D. Sample Warranty: Copy of manufacturer's warranty.

1.7 CLOSEOUT SUBMITTALS

A. Maintenance Data: For asphalt shingles to include in maintenance manuals.

B. Furnish a list containing the names and contact telephone numbers of the roofing contractor's service manager, superintendent, project manager and the roofing contractor's current mailing address.

1.8 MAINTENANCE MATERIAL SUBMITTALS

A. Furnish extra materials that match products installed and that are packaged with protective covering for storage and identified with labels describing contents.

1. Asphalt Shingles: 100 sq. ft. of each type, in unbroken bundles.

1.9 QUALITY ASSURANCE

A. Qualification of Installers: For the actual cutting, fitting, and installation of the materials of this section, use only personnel who are thoroughly trained and experienced in the specialty, working under supervision which has been specifically approved in writing by the manufacturer of the shingles used.

B. Insurance & Certifications: Contractor must carry and provide documented certificate of insurance for minimum of $1,000,000 of Liability Insurance & Workman's Compensation Insurance per requirements for State of Texas.

C. Windstorm Certification: The Windstorm Engineer must be a licensed and registered Engineer with the State of Texas and have current windstorm certifications by the Texas Department of Insurance.

D. Permits and Fees: Re-roofing permits are required for the buildings in HACB and will be included in the price of the roof replacement. All building permits are the responsibility of the contractor.

E. Change Orders: Any additional changes requiring a Change Order notice must be approved in writing prior to commencing any additional work with extra costs involved.

1.10 DELIVERY, STORAGE, AND HANDLING

A. Store roofing materials in a dry, well-ventilated location protected from weather, sunlight, and moisture according to manufacturer's written instructions.

B. Store underlayment rolls on end on pallets or other raised surfaces. Do not double stack rolls.

C. Protect unused roofing materials from weather, sunlight, and moisture when left overnight or when roofing work is not in progress.

D. Handle, store, and place roofing materials in a manner to prevent damage to roof deck or structural supporting members.

E. In the event of damage, immediately make all repairs and replacement necessary to the approval of and at no additional cost to the HACB.

1.11 FIELD CONDITIONS.

A. Do not install underlayment or shingles on wet surfaces. Install self-adhering sheet underlayment within the range of ambient and substrate temperatures recommended in writing by manufacturer.

B. Precautions shall be taken to maintain resident access to occupied units. The Contractor will work closely with the property manager and their staff during the construction work.

1. The safety of the Contractor's employees, residents and property are solely the responsibility of the Contractor.

2. The Contractor shall assume full responsibility for protection and safe keeping of materials and/or equipment stored on the premises.

3. The Contractor shall comply with recognized health and safety standards and codes.

4. The Contractor shall furnish structurally adequate barricades where needed to prevent accidents and losses.

1.12 WARRANTY

A. Manufacturer's Warranty: Manufacturer agrees to repair or replace asphalt shingles that fail within specified warranty period.

1. Failures include, but are not limited to, the following:

    a. Manufacturing defects.
    b. Installation defects.

2. Material Warranty Period: 50 years from date of Substantial Completion, prorated, with first 15 years non-prorated.

3. Wind-Speed Warranty Period: Asphalt shingles will resist blow-off or damage caused by wind speeds of up to 130 mph for 50 years from date of Substantial Completion.

a. Coverage for wind damage as part of standard shingle, warranty is dependent upon the tabs sealing, either by activating the sealant strip or by hand sealing.

4. Algae-Resistance Warranty Period: Asphalt shingles will not discolor for 20 years from date of Substantial Completion.

5. Workmanship Warranty Period: 2 years from date of Substantial Completion.

B. Roofing Installer's Warranty: On warranty form at end of this Section, signed by Installer, in which Installer agrees to repair or replace components of asphalt-shingle roofing that fail in materials or workmanship within specified warranty period.

1. Warranty Period: 2 years from date of Substantial Completion.

PART 2 – PRODUCTS

2.1 PERFORMANCE REQUIREMENTS

A. Exterior Fire-Test Exposure: Provide asphalt shingles and related roofing materials identical to those of assemblies tested for Class A fire resistance according to ASTM E 108 or UL 790 by Underwriters Laboratories or another testing and inspecting agency acceptable to authorities having jurisdiction. Identify products with appropriate markings of applicable testing agency.

2.2 GLASS-FIBER-REINFORCED ASPHALT SHINGLES

A. Laminated-Strip, SBS-Modified Asphalt Shingles: ASTM D 3462/D 3462M, laminated, multi-ply overlay construction, glass-fiber reinforced, mineral-granule surfaced, and self-sealing; complying with UL 2218, Class 4.

1. Basis-of-Design Product: Subject to compliance with requirements, provide Malarkey Roofing Company; #283 Ecoasis Premium with Scotchgard or a comparable product by one of the following:

a. Atlas EPS; a Division of Atlas Roofing Corporation.
b. CertainTeed Corporation.

2. Butt Edge: Straight cut.

3. Strip Size: Manufacturer's standard.

4. Algae Resistance: Granules resist algae discoloration.

5. Color and Blend: Tumbleweed (SRI-28) or Mesquite (SRI-31); non-blended.

B. Hip and Ridge Shingles: Manufacturer's standard units to match asphalt shingles.

1. Basis-of-Design Product: Subject to compliance with requirements, provide Malarkey Roofing Company; #224 EZ-Ridge XT 10" with Scotchgard (blended color) or a comparable product by one of the following:

a. Atlas EPS; a Division of Atlas Roofing Corporation.
b. CertainTeed Corporation.

C. Starter Shingles: Manufacturer's standard units to match asphalt shingles.

1. Basis-of-Design Product: Subject to compliance with requirements, provide Malarkey Roofing Company; #220 Smart Start or a comparable product by one of the following:

a. Atlas EPS; a Division of Atlas Roofing Corporation.
b. CertainTeed Corporation.

2.3 UNDERLAYMENT MATERIALS.

A. Synthetic Underlayment: UV-resistant polypropylene, polyolefin, or polyethylene polymer fabric with surface coatings or treatments to improve traction underfoot and abrasion resistance; evaluated and documented to be suitable for use as a roof underlayment under applicable codes by a testing and inspecting agency acceptable to authorities having jurisdiction.

1. Basis-of-Design Product: Subject to compliance with requirements, provide Malarkey Roofing Company; Secure Start or a comparable product by one of the following:

a. Atlas EPS; a Division of Atlas Roofing Corporation.
b. CertainTeed Corporation.

B. Self-Adhering Sheet Underlayment, High Temperature. Minimum of 40-mil-thick; with slip- resisting, polymer-film-reinforced or glass-reinforced top surface laminated to layer of butyl or SBS-modified asphalt adhesive; with release backing; cold applied; and evaluated and documented to be suitable for use for intended purpose under applicable codes by a testing and inspecting agency acceptable to authorities having jurisdiction.

1. Basis-of-Design Product: Subject to compliance with requirements, provide Malarkey Roofing Company; Arctic Seal or a comparable product by one of the following:

a. Atlas EPS; a Division of Atlas Roofing Corporation.
b. CertainTeed Corporation.

2. Thermal Stability: Stable after testing at 240 deg F according to ASTM D 1970/D 1970M.

3. Low-Temperature Flexibility: Passes after testing at minus 20 deg F according to ASTM D 1970/D 1970M.

2.4 STATIC ROOF VENTS

A. Aluminum Static Roof Vent: Manufacturer's standard roof louvers, three outward and upward discharging side vents.

B. Basis-of-Design Product: Subject to compliance with requirements, provide Lomanco Vents; 750 Slant Back or a comparable product by one of the following:

1. Minimum Net Free Area: 50-square inches.
2. Size: 16 x 20-5/16 x 5-inches.
3. Opening Size: 8-inches.
4. Color: Mill Finish
5. Performance: TDI Compliant.

C. Basis-of-Design Product. Subject to compliance with requirements, provide Lomanco Vents; EVA combo vent 730 or a comparable product by one of the following:

1. Minimum Net Free Area: 30-square inches.
2. Size: 16 x 20-5/16 x 5-inches.
3. Opening Size. 8-inches.
4. Color: Mill Finish.
5. Performance: TDI Compliant.
6. Duct: Fits 3" and 4".

2.5 ACCESSORIES

A. Asphalt Roofing Cement: ASTM D 4586, Type II, asbestos free.

B. Roofing Nails: ASTM F 1667; hot-dip galvanized-steel wire shingle nails, minimum 0.120-inch- diameter, sharp-pointed, with a minimum 3/8-inch-diameter flat head and of sufficient length to penetrate 3/4 inch into solid wood decking or extend at least 1/8 inch through OSB or plywood sheathing.

1. Shank: Ring.
2. Where nails are in contact with metal flashing, use nails made from same metal as flashing.

C. Felt-Underlayment Nails: Aluminum, stainless-steel, or hot-dip galvanized-steel wire with low- profile capped heads or disc caps, 1-inch minimum diameter.

D. Synthetic-Underlayment Fasteners: As recommended in writing by synthetic-underlayment manufacturer for application indicated.

2.6 METAL FLASHING AND TRIM

A. General: Comply with requirements in "Sheet Metal Flashing and Trim."

1. Sheet Metal: Zinc-tin alloy-coated steel.

B. Fabricate sheet metal flashing and trim to comply with recommendations in SMACNA's "Architectural Sheet Metal Manual" that apply to design, dimensions, metal, and other characteristics of the item.

1. Apron Flashings: Fabricate with lower flange a minimum of 4 inches over and 4 inches beyond each side of downslope asphalt shingles and 6 inches up the vertical surface.

2. Step Flashings: Fabricate with a headlap of 2 inches and a minimum extension of 4 inches over the underlying asphalt shingle and up the vertical surface.

3. Closed-Valley Flashings: Fabricate in lengths not exceeding 10 feet with center of valley and equal flange widths of 12 inches.

4. Drip Edges: Fabricate in lengths not exceeding 10 feet with 2-inch roof-deck flange and 1-1/2-inch fascia flange with 3/8-inch drip at lower edge.

C. Vent Pipe Flashings: ASTM B 749, Type L51121, at least 1/16 inch thick. Provide lead sleeve sized to slip over and turn down into pipe, soldered to skirt at slope of roof, and extending at least 4 inches from pipe onto roof.

2.7 MISCELLANEOUS LUMBER

In performing the work there may be a need to replace a sheet of damaged plywood and or/to replace a section of fascia/soffit. Therefore, please indicate the cost of:

Replacing a sheet of plywood: $ _____.

Replacing a linear foot of fascia/soffit: $ _____.

PART 3 – EXECUTION

3.1 PREPARATION.

A. Remove existing asphalt shingles and felt from the deck. Remove all metal flashing. Dispose of old roofing material in accordance with all EPA and State of Texas regulations.

B. Examine deck with the Contracting Officer. Repair of roof deck shall be made matching with existing material.

C. Replace all fascia around of roof.

1. Apply caulking materials to weather seal all openings in exterior fascia or soffit and all joints between dissimilar materials.

2. Apply primer and paint on hardy plank or siding installed. Succeeding coats shall be applied as required to provide a uniform full coating over all painted or finishes surfaces.

D. Remove and dispose of all existing roof vents and install new roof vents at all roof penetrations.

3.2 SURFACE CONDITIONS.

A. Examine substrates, areas, and conditions, with Installer present, for compliance with requirements for installation tolerances and other conditions affecting performance of the Work.

1. Examine roof sheathing to verify that sheathing joints are supported by framing and blocking, or metal clips and that installation is within flatness tolerances.

2. Verify that substrate is sound, dry, smooth, clean, sloped for drainage, and completely anchored; and that provisions have been made for flashings and penetrations through asphalt shingles.

B. Call for project Structural or Windstorm Engineer to conduct nailing pattern inspection/observation, prepare written report, endorsed by Installer, listing conditions detrimental to the performance of the work.

C. Proceed with installation only after unsatisfactory conditions have been corrected.

D. Coordinate schedule for installation of shingle roofing with schedules for installation of sheet metal flashing, so that the roof deck will have minimum practicable exposure to the weather.

1. Sheet metal flashing shall be on-site ready for installation as shingle roofing work progresses. Completed installation shall provide for a weathertight assembly.

3.3 UNDERLAYMENT INSTALLATION

A. General: Comply with underlayment manufacturer's written installation instructions applicable to products and applications indicated unless more stringent requirements apply.

B. Synthetic Underlayment: Install on roof deck parallel with and starting at the eaves. Lap sides and ends and treat laps as recommended in writing by manufacturer. Stagger end laps between succeeding courses at interval recommended in writing by manufacturer. Fasten according to manufacturer's written instructions. Cover underlayment within period recommended in writing by manufacturer.

1. Install in single layer on roofs sloped at 4:12 and greater.
2. Install in double layer on roofs sloped at less than 4:12.

C. Self-Adhering Sheet Underlayment: Install, wrinkle free, on roof deck. Comply with low- temperature installation restrictions of underlayment manufacturer if applicable. Install lapped in direction that sheds water. Lap sides not less than 3-1/2 inches. Lap ends not less than 6 inches staggered 24 inches between courses, roll laps with roller cover. The underlayment must be completed within seven days.

1. Prime surfaces to receive self-adhering sheet underlayment.
2. Eaves: Extend from edges of eaves 24 inches beyond interior face of exterior wall.
3. Rakes: Extend from edges of rake 24 inches beyond interior face of exterior wall.
4. Valleys: Extend from lowest to highest point 18 inches on each side.
5. Hips: Extend 18 inches on each side.
6. Ridges: Extend 36 inches on each side.
7. Sidewalls: Extend beyond sidewall 18 inches and return vertically against sidewall not less than 4 inches.

8. Other Roof-Penetrating Elements: Extend beyond penetrating element 18 inches and return vertically against penetrating element not less than 4 inches.
9. Roof Slope Transitions: Extend 18 inches on each roof slope.

D. Concealed Valley Lining: For woven valleys comply with NRCA's "NRCA Guidelines for Asphalt Shingle Roof Systems." Install underlayment centered in valley and fastened to roof deck.

1. Lap roof-deck underlayment over valley underlayment at least 6 inches.

2. Install a 36-inch-wide strip of granular-surfaced valley lining, with granular-surface face up, centered in valley. Lap ends of strips at least 12 inches in direction to shed water, and seal with asphalt roofing cement fasten to roof deck.

E. Metal-Flashed, Valley Underlayment: Install two layers of minimum 36-inch-wide underlayment centered in valley. Stagger end laps between layers at least 72 inches. Lap ends of each layer at least 12 inches in direction to shed water, and seal with asphalt roofing cement. Fasten each layer to roof deck.

1. Lap roof-deck underlayment over first layer of valley underlayment at least 6 inches.

3.4 METAL FLASHING INSTALLATION

A. General: Install metal flashings and other sheet metal to comply with requirements in Section 076200 "Sheet Metal Flashing and Trim."

1. Install metal flashings according to recommendations in ARMA's "Residential Asphalt Roofing Manual" and NRCA's "NRCA Guidelines for Asphalt Shingle Roof Systems."

B. Apron Flashings: Extend lower flange over and beyond each side of downslope asphalt shingles and up the vertical surface.

C. Step Flashings: Install with a headlap of 2 inches and extend over the underlying asphalt shingle and up the vertical surface. Fasten to roof deck only.

D. Cricket or Backer Flashings: Install against the roof-penetrating element extending concealed flange beneath upslope asphalt shingles and beyond each side.

E. Open-Valley Flashings: Install centered in valleys, lapping ends at least 8 inches in direction to shed water. Fasten upper end of each length to roof deck beneath overlap.

1. Secure hemmed flange edges into metal cleats spaced 12 inches apart and fastened to roof deck.

2. Adhere 9-inch- wide strip of self-adhering sheet to metal flanges and to self-adhering sheet underlayment.

F. Rake Drip Edges: Install rake drip-edge flashings over underlayment and fasten to roof deck.

G. Eave Drip Edges: Install eave drip-edge flashings below underlayment and fasten to roof sheathing.

H. Pipe Flashings: Form flashing around pipe penetrations and asphalt shingles. Fasten and seal to asphalt shingles as recommended by manufacturer.

3.5 ASPHALT-SHINGLE INSTALLATION

A. General: Install asphalt shingles according to manufacturer's written instructions, recommendations in ARMA's "Residential Asphalt Roofing Manual," and recommendations in NRCA's "NRCA Guidelines for Asphalt Shingle Roof Systems."

B. Starter Shingle Course: Install starter strip along lowest left-hand roof edge, consisting of a starter shingle strip with tabs removed at least 8 inches wide with self-sealing strip face up at roof edge.

1. Starting at the lower left-hand corner of roof edge, cut 6-inches off left side of the first starter strip.
2. Extend starter shingles 1/4-inch to 3/8-inch over edge metal at eaves and rakes.
3. Fasteners should be placed 1-1/2-inch to 3-inches up from eave, with 1 fastener within 1-inch of each end and the other 4 fasteners evenly spaced.
4. Continue with starter course across the roof with full starter shingle.
5. Install starter strip tabs along rake edge, if rake condition is present.

C. First Shingle Course: Start with a full shingle applied onto and flush with the starter course at the lower left-hand corner of roof and secure with 6 fasteners, along patented nail zone.

D. Second Shingle Course: Cut 5-5/8-inches in from the left end of a shingle and apply the remaining 34-3/8-inch section over the first course shingle, exposing the first course 5-5/8- inches. Butt bottom edge of shingle should be applied to the top of saw tooth of underlying shingle so that there will be 5-5/8-inches of each shingle exposed; secure with 6 fasteners, along patented nail zone.

E. Third Shingle Course: Cut 11-1/4-inches in from the left end of a shingle and apply the remaining 28-3/4-inch section over the second course shingle, exposing the second course 5- 5/8-inches; secure with 6 fasteners, along patented nail zone.

F. Succeeding Shingle Courses: Courses four (4) through seven (7) are begun with a partial 5-5/8- inches shorter progressively, establishing the overall diagonal method or stair step effect. Pieces cut from shingle along left rake can be used to finish off courses at the right rake. Now apply a full shingle to the seven (7) courses to extend the pattern starting with the first course.

G. Courses eight (8) through fourteen (14), repeat the process beginning with a full shingle and continue succeeding courses with partial 5-5/8-inch shingle shorter each time. Succeeding courses also repeat this procedure beginning with a full shingle.

H. Strike a chalk line about every six (6) courses to ensure straight courses.

I. Shingles may be laid either left or right hand. Start at either rake edge and follow layout and cutting instructions as required for proper application. Fill-in pieces less than 3-inches are not acceptable at rake edges.

J. 8-inch offset is also acceptable, maintain a minimum of a 4-inch offset.

K. Fasten asphalt-shingle strips with a minimum of six roofing nails located according to manufacturer's written instructions.

    1. Use six (6) fasteners for each shingle, nails must be placed within the nailing zone, 1- inch from each edge of the shingle with remaining four (4) nails evenly spaced on the same line as the end nails.
    2. When fastening, butt shingle ends loosely to prevent buckling.
    3. Fasteners must not be overdriven to cut into the shingle, or under driven.
    4. Fastener must be seated flush to shingle as illustrated on shingle wrapper.
    5. Where roof slope is less than 4.12, seal asphalt shingles with asphalt roofing cement spots.
    6. When ambient temperature during installation is below 50 deg F, seal asphalt shingles with asphalt roofing cement spots.

L. Woven Valleys: Extend succeeding asphalt-shingle courses from both sides of valley 12 inches beyond center of valley, weaving intersecting shingle-strip courses over each other. Use one- piece shingle strips without joints in valley.
    1. Do not nail asphalt shingles within 9 inches of valley center.

M. Closed-Cut Valleys: Extend asphalt-shingle strips from one side of valley 12-inches beyond center of valley. Use one-piece shingle strips without joints in valley. Fasten

with extra nail in upper end of shingle. Install asphalt-shingle courses from other side of valley and cut back to a straight line 2 inches short of valley centerline. Trim upper concealed corners of cut-back shingle strips.

1. Do not nail asphalt shingles within 6 inches of valley center.
2. Set trimmed, concealed-corner asphalt shingles in a 3-inch-wide bed of asphalt roofing cement.

N. No open, bleeder or point valleys, they are not acceptable.

O. Ridge Vents: Install continuous ridge vents over asphalt shingles according to manufacturer's written instructions. Fasten with roofing nails of sufficient length to penetrate sheathing.

P. Hip and Ridge Shingles: Maintain same exposure of cap shingles as roofing shingle exposure. Lap cap shingles at ridges to shed water away from direction of prevailing winds. Fasten with roofing nails of enough length to penetrate sheathing.

1. Fasten ridge cap Asphalt shingles to cover ridge vent without obstructing airflow.

3.6 ROOFING INSTALLER'S WARRANTY

A. WHEREAS (Insert name) _____ of (Insert address)_____, herein called the "Roofing Installer," has performed roofing and associated work ("the work") on the following project:

1. Owner: Housing Authority of City of Brownsville (HACB).
2. Address: 2606 Boca Chica Boulevard.
3. Project: Bougainvillea Re-Roofing
4. Project address: 755 Jefferson, Brownsville, Texas 78520.
5. Area of the Work. Entire Roof System.
6. Acceptance Date:_____.
7. Warranty Period: Two (2) Years.
8. Expiration Date:_____.

B. AND WHEREAS Roofing Installer has contracted (either directly with Owner or indirectly as a subcontractor) to warrant the work against leaks and faulty or defective materials and workmanship for designated Warranty Period.

C. NOW THEREFORE Roofing Installer hereby warrants, subject to terms and conditions herein set forth, that during Warranty Period he will, at his own cost and expense, make or cause to be made such repairs to or replacements of the work as are

necessary to correct faulty and defective work and as are necessary to maintain the work in a watertight condition.

D. This Warranty is made subject to the following terms and conditions.

1. Specifically excluded from this Warranty are damages to the work and other parts of the building, and to building contents, caused by:

   a. Lightning, Fire, Peak gust wind speed exceeding 130-mph.
   b. Failure of roofing system substrate, including cracking, settlement, excessive deflection, deterioration, and decomposition.

   c. Faulty construction of parapet walls, copings, chimneys, skylights, vents, equipment supports, and other edge conditions and penetrations of the work.

   d. Vapor condensation on bottom of roofing; and Activity on roofing by others, including construction contractors, maintenance personnel, other persons, and animals, whether authorized or unauthorized by Owner.

2. When the work has been damaged by any of foregoing causes, Warranty shall be null and void until such damage has been repaired by Roofing Installer and until cost and expense thereof have been paid by Owner or by another responsible party so designated.

3. Roofing Installer is responsible for damage to the work covered by this Warranty but is not liable for consequential damages to building or building contents resulting from leaks or faults or defects of the work.

4. During Warranty Period, if Owner allows alteration of the work by anyone other than Roofing Installer, including cutting, patching, and maintenance in connection with penetrations, attachment of other work, and positioning of anything on roof, this Warranty shall become null and void on date of the alterations, but only to the extent the alterations affect the work covered by this Warranty. If Owner engages Roofing Installer to perform the alterations, Warranty shall not become null and void unless Roofing Installer, before starting the alterations, notified Owner in writing, showing reasonable cause for claim, that the alterations would likely damage or deteriorate the work, thereby reasonably justifying a limitation or termination of this Warranty.

5. During Warranty Period, if original use of roof is changed and it becomes used for, but was not originally specified for, a use or service more severe

than originally specified, this Warranty shall become null and void on date of the change, but only to the extent the change affects the work covered by this Warranty.

6. Owner shall promptly notify Roofing Installer of observed, known, or suspected leaks, defects, or deterioration and shall afford reasonable opportunity for Roofing Installer to inspect the work and to examine evidence of such leaks, defects, or deterioration.

7. This Warranty is recognized to be the only warranty of Roofing Installer on the work and shall not operate to restrict or cut off Owner from other remedies and resources lawfully available to Owner in cases of roofing failure. Specifically, this Warranty shall not operate to relieve Roofing Installer of responsibility for performance of the work according to requirements of the Contract Documents, regardless of whether Contract was a contract directly with Owner or a subcontract with Owner's General Contractor.

E. IN WITNESS THEREOF, this instrument has been duly executed this_____day of _____, of the year_____.

1. Authorized Signature._____.
2. Name._____.
3. Title._____.

END OF SECTION

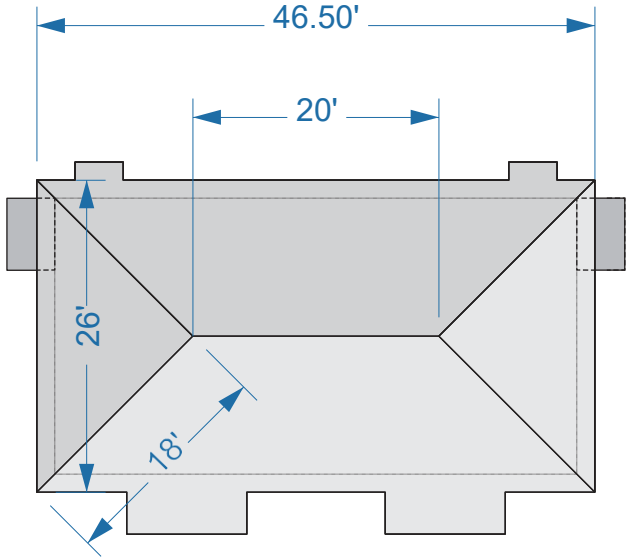

1

SCALE 1/16" = 1'-0"

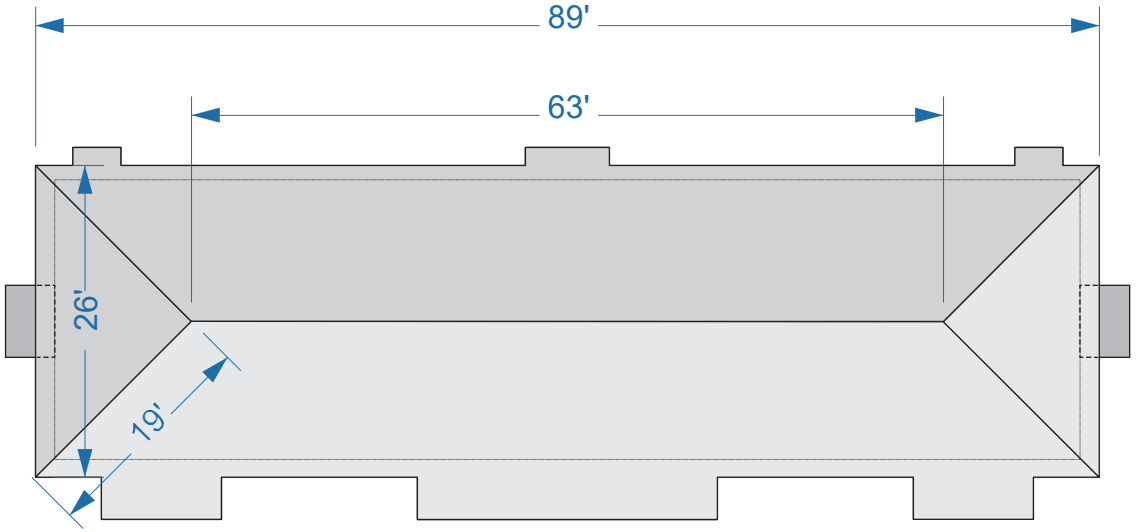

2

SCALE 1/16" = 1'-0"

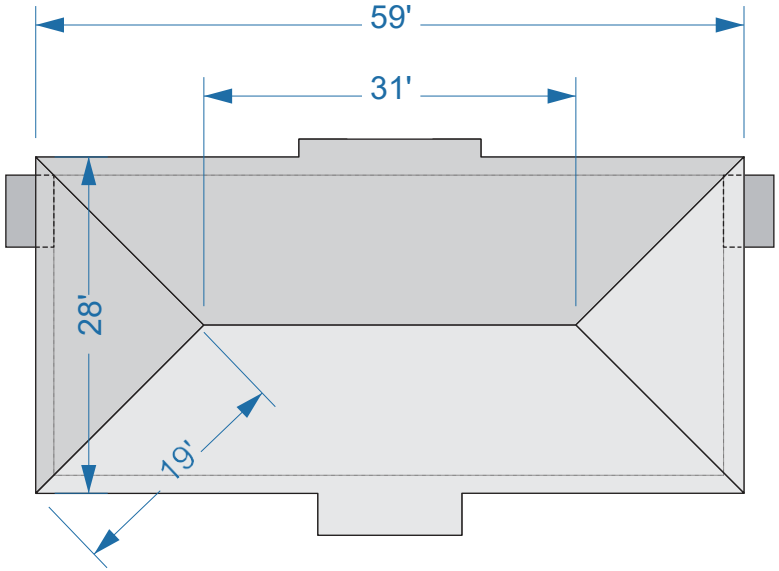

3

SCALE 1/16" = 1'-0"

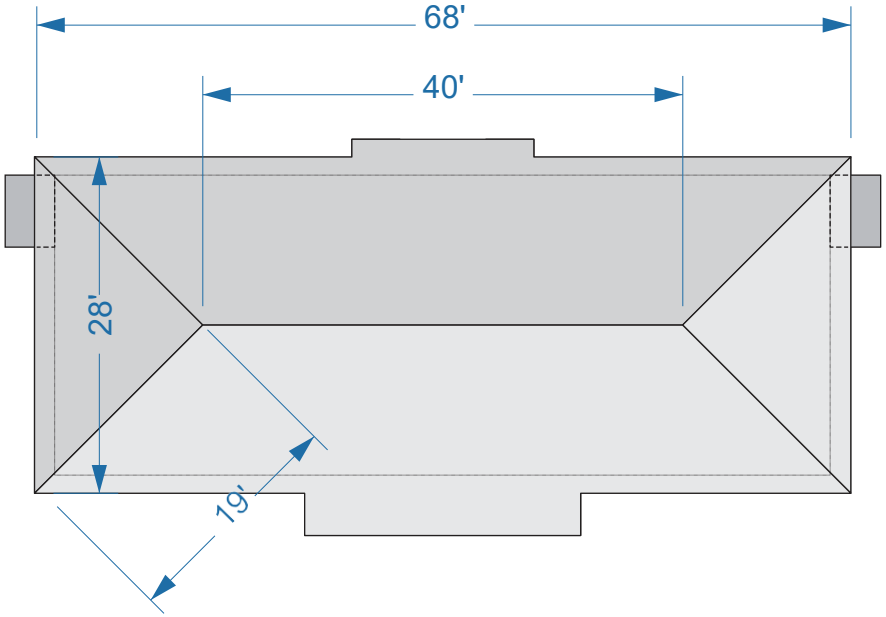

4

SCALE 1/16" = 1'-0"

Capital Fund

PROJECT:

TX-59-P007-002
50 MULTY FAMILY DWELLING UNITS
BOUGAINVILLEA DEVELOPMENT
755 W. Jefferson St.
BROWNSVILLE, TX 78521

1941

BOGAINVILLEA ROOF PLANS

Brownsville Texas

APPROVED:

REVISED:

SCALE: 1/16" = 1'

DRAWN BY:

Jesus Ramirez
(956) 455-6923

DATE: 08/02/18

SHEET No.

7-2 BOUGAINVILLEAS DEVELOPMENT

UNIT	ADDRESS	BDR	QTY BUILDING	TYPE OF BUILDING	SQUARES	PRICE/PER SQUARE	QUOTE AMOUNT PER BUILDING
1	5 W.JEFFERSON	3	1	D			
2	5 W.JEFFERSON	3					
3	8 BOUGANVILLEA	3	1	D			
4	6 BOUGANVILLEA	3					
5	4 BOUGANVILLEA	2	1	C			
6	2 BOUGANVILLEA	2					
7	2 BOUGANVILLEA	2	1	C			
8	0 BOUGANVILLEA	2					
9	8 BOUGANVILLEA	2	1	C			
10	6 BOUGANVILLEA	2					
11	4 BOUGANVILLEA	1	1	A			
12	2 BOUGANVILLEA	1					
13	0 BOUGANVILLEA	2	1	C			
14	8 BOUGANVILLEA	2					
15	6 BOUGANVILLEA	2	1	C			
16	4 BOUGANVILLEA	2					
17	2 BOUGANVILLEA	3	1	D			
18	0 BOUGANVILLEA	3					
19	7 W.JEFFERSON	2	1	C			
20	5 W.JEFFERSON	2					
21	1 BOUGANVILLEA	1	1	A			
22	3 BOUGANVILLEA	1					
23	5 BOUGANVILLEA	3	1	D			
24	7 BOUGANVILLEA	3					
25	3 BOUGANVILLEA	3	1	D			
26	5 BOUGANVILLEA	3					
27	7 BOUGANVILLEA	3	1	D			
28	9 BOUGANVILLEA	3					
29	0 W.WASHINGTON	2	1	C			
30	8 W.WASHINGTON	2					
31	4 W.WASHINGTON	2	1	C			
32	2 W.WASHINGTON	2					
33	8 BOUGANVILLEA	2	1	C			
34	6 BOUGANVILLEA	2					
35	1 BOUGANVILLEA	2	1	C			
36	3 BOUGANVILLEA	2					
37	5 BOUGANVILLEA	2	1	C			
38	7 BOUGANVILLEA	2					
39	9 BOUGANVILLEA	1	1	B			
40	1 BOUGANVILLEA	1					
41	3 BOUGANVILLEA	1					
42	5 BOUIGANVILLEA	1					
43	7 BOUGANVILLEA	1	1	B			
44	9 BOUGANVILLEA	1					
45	1 BOUGANVILLEA	1					
46	3 BOUGANVILLEA	1					
47	5 BOUGANVILLEA	1	1	A			
48	7 BOUGANVILLEA	1					
49	3 W.JEFFERSON	2	1	C			
50	1 W.JEFFERSON	2					
		TOTAL	23				$ -

UNIT PRICES

Unit Price 1. 2 x 6 White Pine

1 _____ Dollars ($_____)

Per Linear Feet

Unit Price 2. 4 x 8 Plywood 1/2 In

2 _____ Dollars ($_____)

Per Sheet